UNION COUNTY CIVIC CENTER REROOFING

BLAIRSVILLE, GEORGIA

GENERAL NOTES

1. DO NOT SCALE DRAWINGS. USE WRITTEN DIMENSIONS ONLY. SUBMIT ANY DISCREPANCIES TO THE ARCHITECT FOR CLARIFICATION PRIOR TO EXECUTION OF THE WORK IN QUESTION.

2. ALL DIMENSIONS ARE TO FACE OF BRICK, STONE, CONCRETE BLOCK OR FACE OF GYPSUM BOARD UNLESS NOTED OTHERWISE.

3. THE CONTRACTOR SHALL BE RESPONSIBLE FOR EXECUTION OF THE WORK IN ACCORDANCE WITH THE DRAWINGS AND SPECIFICATIONS UNLESS WRITTEN NOTIFICATION TO THE CONTRARY IS ISSUED AND SIGNED BY THE OWNER AND/OR ARCHITECT.

4. THE LOCATION OF THE EXISTING UTILITIES AND STRUCTURES SHOWN IN THE DOCUMENTS ARE APPROXIMATE. IT SHALL BE THE RESPONSIBILITY OF THE CONTRACTOR TO VERIFY THE EXISTENCE AND ACTUAL LOCATION OF SUCH, WHETHER SHOWN HEREON OR NOT, PRIOR TO ANY EXCAVATION.

5. IMMEDIATELY NOTIFY ARCHITECT IN WRITING IF ANY OMISSION, DISCREPANCY, AMBIGUITY OR ERROR IN THE CONTRACT DOCUMENTS BE DISCOVERED OR IF ANY DOUBT AS TO THE MEANING OR INTENT THEREOF SHOULD ARISE. CLARIFICATION WILL BE MADE BY REVISION TO THE CONTRACT DOCUMENTS.

6. CONTRACTOR SHALL NOT USE ANY MATERIALS CONTAINING ASBESTOS OR OTHER HAZARDOUS MATERIALS.

7. SHOP DRAWINGS AND SAMPLES SHALL BE SUBMITTED FOR APPROVAL TO THE ARCHITECT PRIOR TO CONSTRUCTION AND/OR PURCHASE OF MATERIALS DESCRIBING THE OVERALL SCOPE AS WELL AS COMPLETE DETAILS OF WORK TO BE PERFORMED. ALL FABRICATION SHALL BE BASED ON ACTUAL FIELD DIMENSIONS.

8. CONTRACTOR SHALL OBTAIN ALL PERMITS AND INSPECTION REQUIRED BY LOCAL AND STATE AND LOCAL CODES. ALL RECOMMENDATIONS AND REQUIREMENTS OF THE STATE CODES, AND NFPA 90-A SHALL BE FOLLOWED.

9. VISIT THE JOB SITE AND CHECK ALL EXISTING CONDITIONS PRIOR TO SUBMITTING A PRICE FOR PERFORMING ANY WORK.

VICINITY MAP

n.t.s.

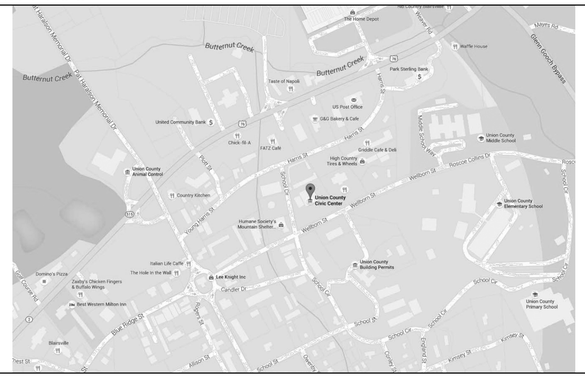

SCOPE OF WORK

1. REMOVE AND REPLACE BUILT UP ROOFING ON LOWER ROOF
2. PATCH / CAP OFF ABANDONED ROOF PENETRATIONS
3. REPAIR DAMAGED ROOF DECKING

CODE DATA

- INTERNATIONAL BUILDING CODE (IBC): 2012 EDITION WITH GEORGIA AMENDMENTS.
- NATIONAL ELECTRIC CODE (NEC): 2014 EDITION
- INTERNATIONAL FUEL GAS CODE (IFGC): 2012 EDITION WITH GEORGIA AMENDMENT.
- INTERNATIONAL MECHANICAL CODE (IMC): 2012 EDITION WITH GEORGIA AMENDMENTS
- INTERNATIONAL PLUMBING CODE (IPC): 2012 EDITION WITH GEORGIA AMENDMENTS
- INTERNATIONAL ENERGY CONSERVATION CODE (IECC): 2009 EDITION WITH GEORGIA AMENDMENTS
- INTERNATIONAL RESIDENTIAL CODE (IRC): 2012 EDITION WITH GEORGIA AMENDMENTS
- INTERNATIONAL FIRE CODE (IFC): 2012 EDITION WITH GEORGIA FIRE MARSHAL AMENDMENTS
- GEORGIA ACCESSIBILITY CODE - GAC 120-3-20 - 1997 EDITION
- NATIONAL FIRE PROTECTION ASSOCIATION 101 LIFE SAFETY CODE (LSC): 2012 EDITION
- U.S. DEPARTMENT OF JUSTICE A.D.A. STANDARDS FOR ACCESSIBLE DESIGN (ADA): 2010 EDITION
- CHAPTER 120-3-3 RULES AND REGULATIONS FOR THE STATE MINIMUM FIRE STANDARDS IN GEORGIA

LEGEND

- (A) COLUMN LINE
- (#/A1.1) DETAIL/DWG.
- (#/A4.1) ELEVATION/DWG. OF BLDG. SECTION/DWG.
- (#/A1.1) WALL SECTION/DWG. OF DETAIL/DWG.
- (XXX-#) FINISH TYPE
- (SF-##) STOREFRONT TYPE
- (##) PARTITION TYPE
- (NAME/###) ROOM NAME / NUMBER
- (#) DOOR NUMBER
- (#/A1.1) INTERIOR ELEVATION
- EL +0 1/2" F.O. CONC. — SPOT ELEVATION
- FIN. FL. 0'-0" — DATUM
- (A) REVISION - ADDENDUM
- (#) REVISION - CONSTRUCTION BULLETIN

PROJECT TEAM

OWNER:
UNION COUNTY COMMISSIONER'S OFFICE
65 COURTHOUSE STREET
BLAIRSVILLE, GA 30512
CONTACT: LARRY GARRETT
EMAIL: UCMANAGER@UNIONGOV.COM

24 HOUR CONTACT:
TBD

ARCHITECT:
GARDNER SPENCER SMITH TENCH & JARBEAU, PC
50 HURT PLAZA SE, SUITE 1100
ATLANTA, GA 30303
CONTACT: RANDY SMITH, AIA
TELEPHONE: (404) 522-8805
FAX: (404) 521-2118
EMAIL: RSMITH@GSSTJ.COM

ROOFING CONSULTANT:
REEVES CONSULTING, INC.
3195 ABBOTTS POINTE DRIVE
DULUTH, GA 30097

INDEX OF DRAWINGS

SHEET	SHEET DESCRIPTION	CURRENT ISSUE	ISSUE DATE
T1.01	TITLE SHEET		04/12/16
ARCHITECTURAL			
A1.00	ROOF PLAN & DETAILS		04/12/16

KEY PLAN

no scale

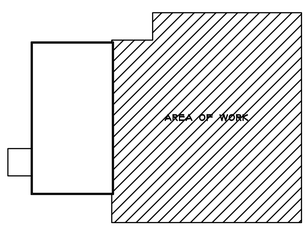

UNION COUNTY CIVIC CENTER
REROOFING
165 WELLBORN STREET
BLAIRSVILLE, GA 30512

GEORGIA REGISTERED ARCHITECT No. 003646 PROFESSIONAL
B. RANDALL SMITH

RELEASED FOR CONSTRUCTION
04/12/16

REVISIONS

Gardner Spencer Smith Tench & Jarbeau
A Professional Corporation for the Practice of Architecture
127 Peachtree St., NE
Suite 1020
Atlanta, Georgia 30303
404 522 8805
404 521 2118 (f)
www.gsstj.com

PROJECT NO.
PROJ# 16106

SHEET TITLE
TITLE SHEET

SHEET NO.
T1.01

© 2010 THESE DOCUMENTS REMAIN THE PROPERTY OF THE ARCHITECT AND MAY NOT BE USED OR REPRODUCED WITHOUT WRITTEN PERMISSION.

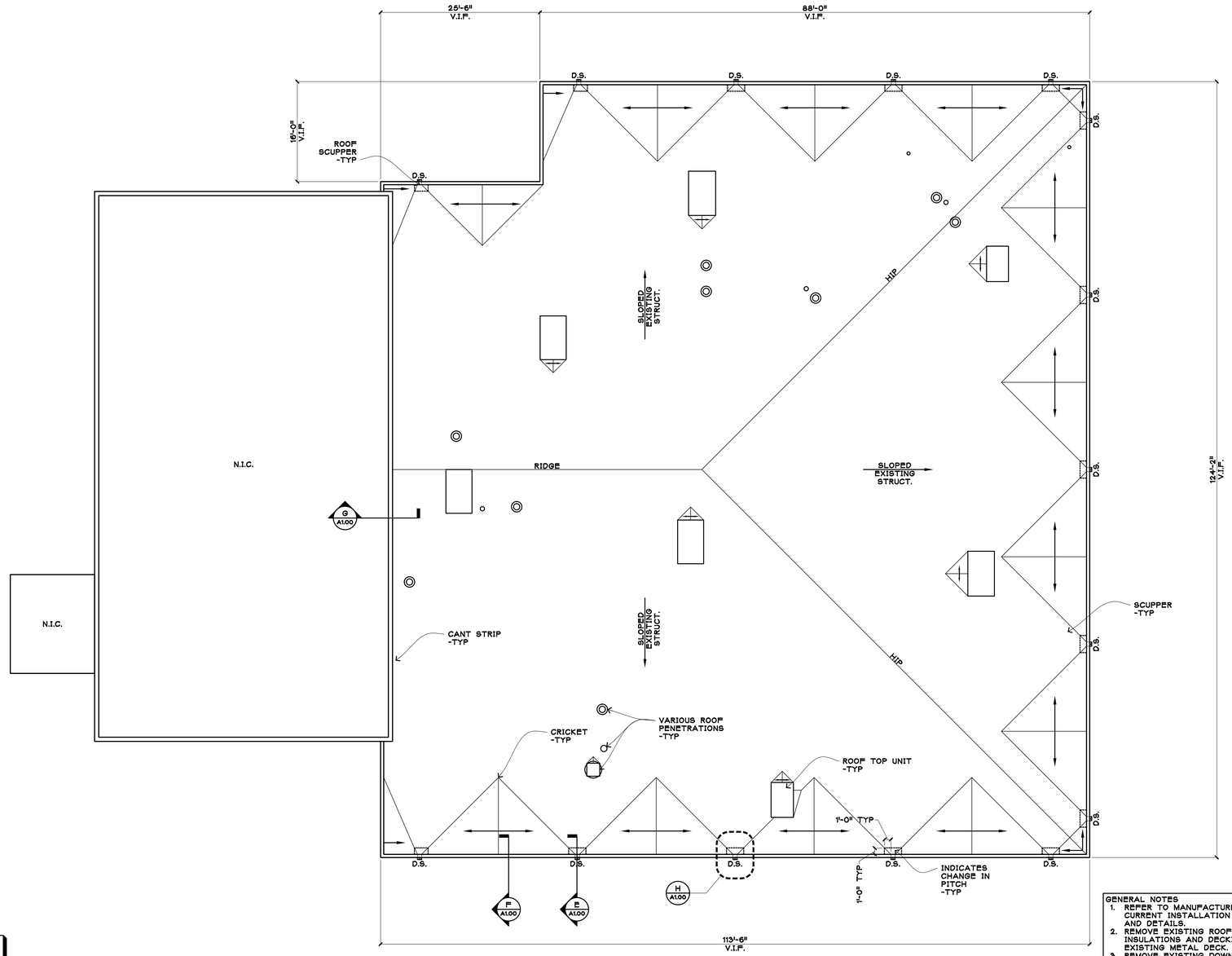

NOTE: SLOPE ON CRICKETS TO MATCH SLOPE OF MAIN ROOF.

GENERAL NOTES
1. REFER TO MANUFACTURER FOR MOST CURRENT INSTALLATION INFORMATION AND DETAILS.
2. REMOVE EXISTING ROOFING, INSULATIONS AND DECKING DOWN TO EXISTING METAL DECK.
3. REMOVE EXISTING DOWNSPOUTS, SCUPPERS, FLASHING AND GRAVEL STOP.

A | ROOF PLAN 1/8" = 1'-0"

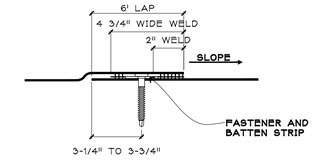

NOTE: WHEN POLYESTER REINFORCEMENT OF TPO IS EXPOSED, APPLY CUT EDGE TREATMENT TO ENTIRE EXPOSED EDGE.

B | LAP SPLICE DETAIL 3" = 1'-0"

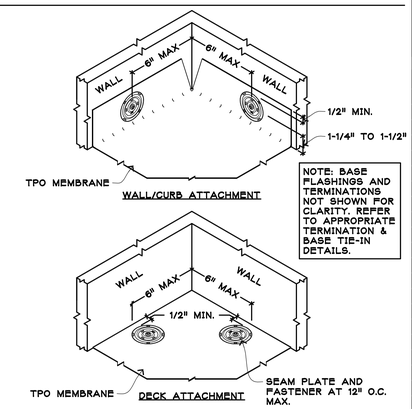

NOTE: BASE FLASHINGS AND TERMINATIONS NOT SHOWN FOR CLARITY. REFER TO APPROPRIATE TERMINATION & BASE TIE-IN DETAILS.

C | INSIDE CORNER DETAIL N.T.S.

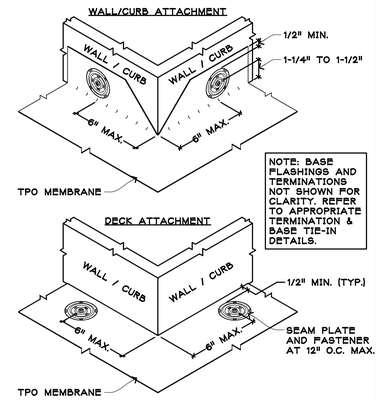

NOTE: BASE FLASHINGS AND TERMINATIONS NOT SHOWN FOR CLARITY. REFER TO APPROPRIATE TERMINATION & BASE TIE-IN DETAILS.

D | OUTSIDE CORNER DETAIL N.T.S.

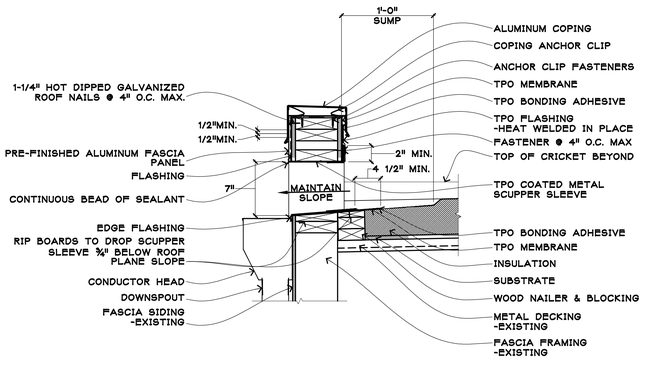

E | DETAIL 1 1/2" = 1'-0"

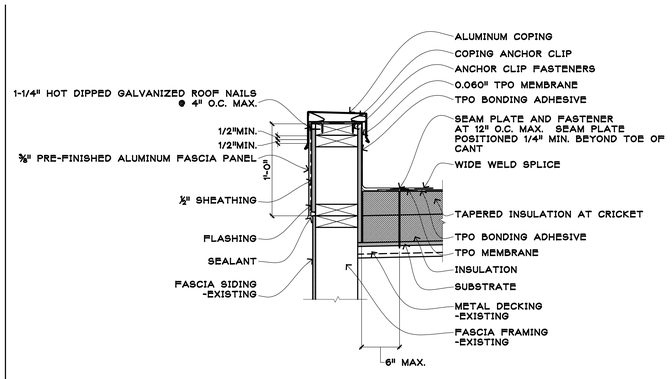

F | DETAIL 1 1/2" = 1'-0"

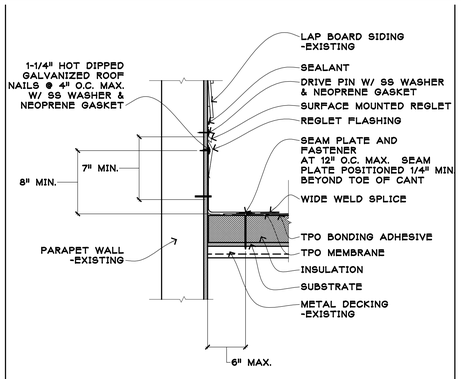

G | DETAIL 1 1/2" = 1'-0"

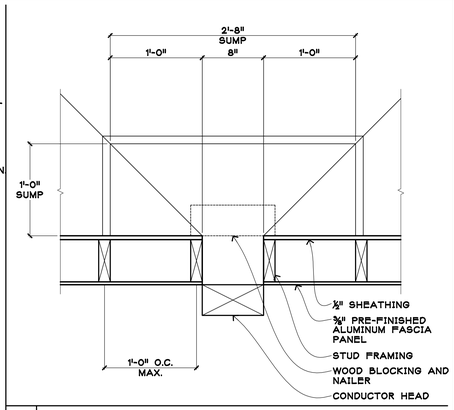

H | PLAN DETAIL 1 1/2" = 1'-0"

UNION COUNTY CIVIC CENTER REROOFING

165 WELLBORN STREET
BLAIRSVILLE, GA 30512

GEORGIA REGISTERED No. 023640 PROFESSIONAL ARCHITECT B. RANDALL SMITH

RELEASED FOR CONSTRUCTION
04/12/16

REVISIONS

© 2010 THESE DOCUMENTS REMAIN THE PROPERTY OF THE ARCHITECT AND MAY NOT BE USED OR REPRODUCED WITHOUT WRITTEN PERMISSION.

Gardner Spencer Smith Tench & Jarbeau
A Professional Corporation for the Practice of Architecture

127 Peachtree St., NE
Suite 1020
Atlanta, Georgia 30303
404 522 8805
404 521 2118 (f)
www.gsstj.com

PROJECT NO.
PROJ# 16106

SHEET TITLE
ROOF PLAN & DETAILS

SHEET NO.
A1.00